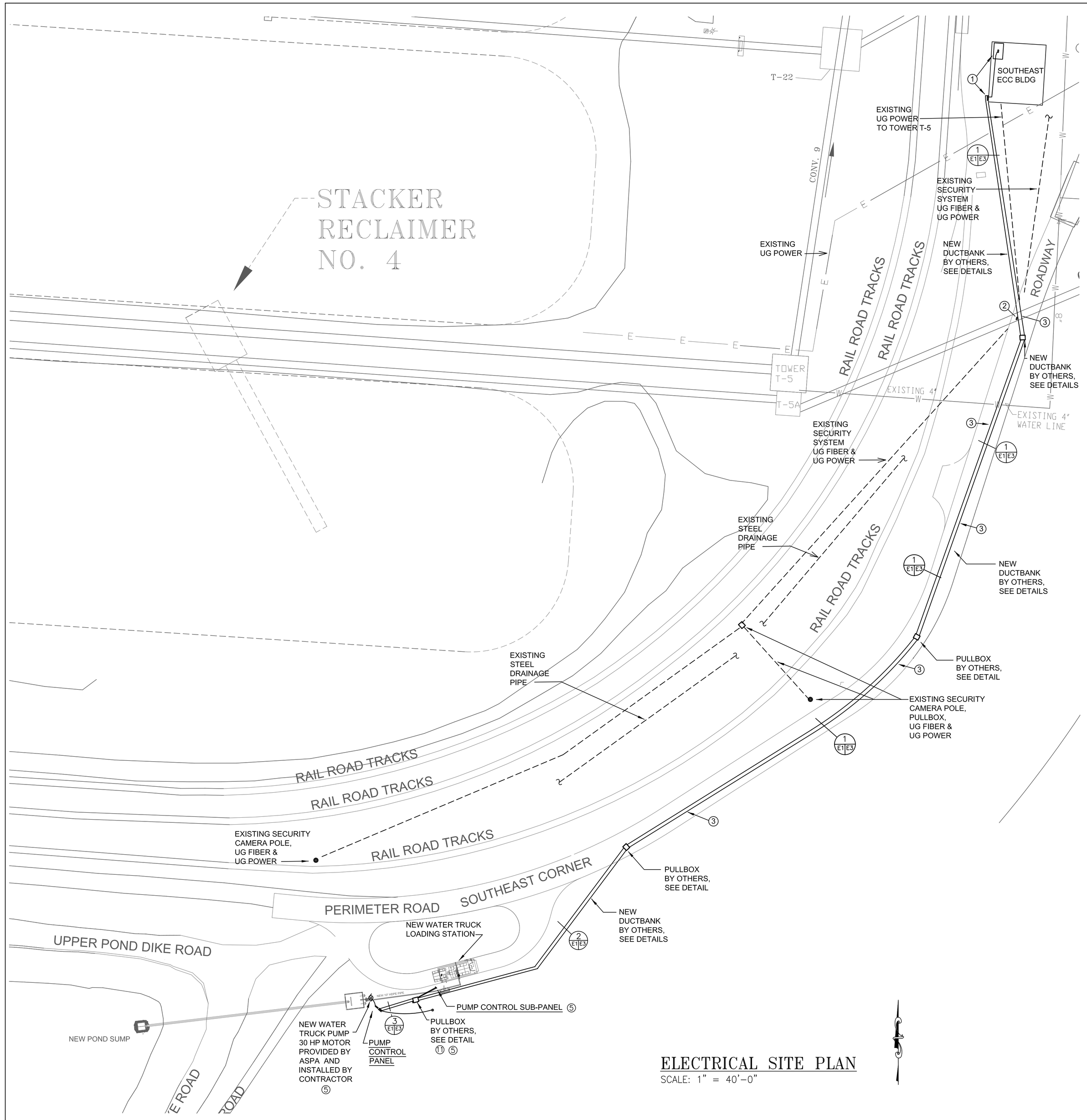

ELECTRICAL SITE PLAN

SCALE: 1" = 40'-0"

KEYNOTES

① EXISTING EMPTY RGS RISER CONDUIT PENETRATION THROUGH WALL SHALL BE USED TO CONNECT DUCTBANK AND ROUTE WIRING INTO BUILDING TO ACCESS OVERHEAD WIRE TRAY TO 480V FOR CONNECTION TO EXISTING POWER PANEL IN NORTHWEST CORNER OF BUILDING. INSTALL NEW 50/3 CIRCUIT BREAKER WITH 65 KAIC RATING. NEW EMPRTY DUCTBANK BY OTHERS. FIELD VERIFY AND PROVIDE/INSTALL AS REQUIRED.

② ROUTE DUCTBANK ON EAST SIDE OF EXISTING CONVEYOR SUPPORT FOUNDATION. EXISTING UG POWER FEEDER AND UG FIBER OPTIC CONDUITS SHALL BE LOCATED BEFOREHAND TO AVOID DAMAGE. CONTRACTOR RESPONSIBLE FOR IMMEDIATE REPAIRS. ADJACENT ROADWAY SHALL REMAIN OPEN FOR A MINIMUM OF ONE LANE FOR DUMP TRUCK AND HEAVY EQUIPMENT TRAFFIC.

③ DUCTBANK SHALL BE ROUTED AS SHOWN AND ROADWAY SHALL REMAIN OPEN FOR A MINIMUM OF ONE WIDE LANE FOR DUMP TRUCK AND HEAVY EQUIPMENT TRAFFIC DURING WEEKDAY WORK HOURS.

④ 24"X ¾" LIGHTNING ROD MOUNTED ON HIGHEST POINT OF STRUCTURE WITH #2 BARE CU WIRE AND 10' GALVANIZED GROUND ROD. CONNECT WIRE TO STEEL STRUCTURE ALSO.

⑤ CONTRACTOR SHALL PROVIDE AND INSTALL ALL COMPONENTS AND APPURTENANCES REQUIRED FOR POWER AND CONTROLS TO BE FULLY FUNCTIONAL AS INDICATED AND SPECIFIED. INCLUDE ALL COSTS IN BID WHETHER INDICATED OR NOT.

⑥ PUMP CONTROL SUB-PANEL SHALL BE MOUNTED ON SS FRAME SIMILIAR TO AS INDICATED ON PUMP CONTROL PANEL AND FRAME DETAIL AND AT LOCATION INDICATED. WIRING FROM MAIN PUMP CONTROL PANEL SHALL BE ROUTED UG IN TWO 2" CONDUITS AND ENCASED IN REINFORCED CONCRETE 36" BELOW FINISHED GRADE. THIS WIRING AND SECTION OF DUCTBANK SHALL BE INSTALLED UNDER THIS CONTRACT.

⑦ CONTRACTOR SHALL PROVIDE AND INSTALL POWER AND CONTROL WIRING FOR ASPA PROVIDED 30 HP PUMP.

⑧ PRECOORDINATE ALL WORK INCLUDING WEEKEND WORK IN THIS AREA TO AVOID CONFLICTS WITH TERMINAL OPERATIONS.

⑨ PROVIDE 5" PVC STUBOUT 18" LONG FOR FUTURE EXTENSION OF DUCTBANK TO SERVE FUTURE TRANSFORMER. INSTALL CAP TO SEAL WATER TIGHT. SEE KEYNOTES 10 AND 11.

⑩ NEW DUCTBANK SHALL PENETRATE TO NORTH SIDE OF HANDHOLE WALL TO ALLOW FOR FUTURE ADDITION OF DUCTBANK. SEE KEYNOTES 9 & 11.

⑪ NEW SPARE CONDUIT SHALL BE CAPPED, SEALED WATERTIGHT, INCLUDE 200# PULL CORD, AND INDICATED ON AS-BUILT DRAWINGS.

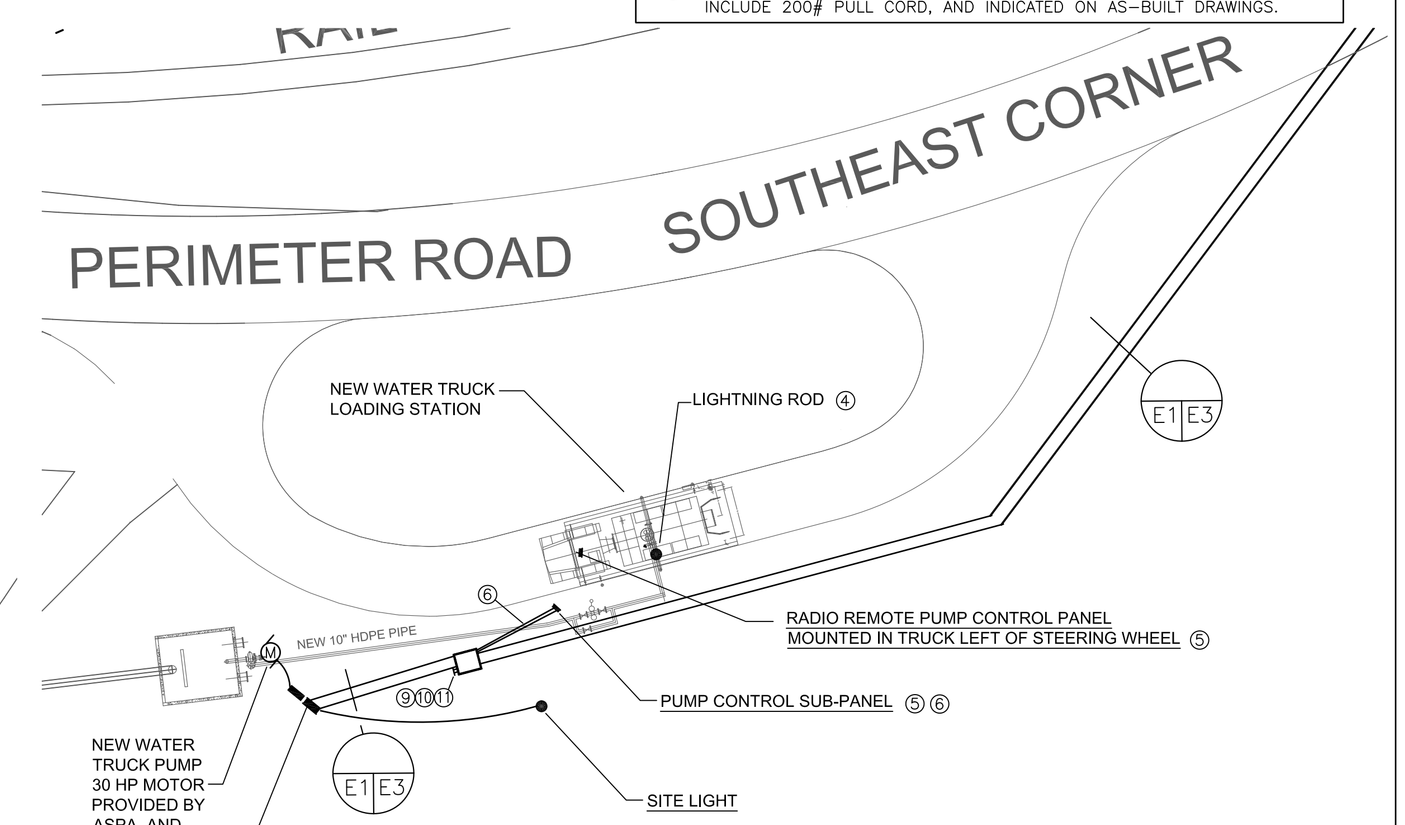

ENLARGED ELECTRICAL SITE PLAN

SCALE: 1" = 20'-0"

WHEN THIS DRAWING IS REPRODUCED AT ORIGINAL SCALE THIS BAR = 1 INCH

1 INCH

EXISTING UNDERGROUND UTILITIES ARE SHOWN AT APPROXIMATE LOCATIONS. ACTUAL LOCATIONS MAY VARY SIGNIFICANTLY. CONTRACTOR SHALL DETERMINE THE EXACT LOCATION OF ALL EXISTING UTILITIES BEFORE COMMENCING WORK. CONTRACTOR AGREES TO BE FULLY RESPONSIBLE FOR ANY AND ALL DAMAGES THAT RESULT FROM HIS FAILURE TO EXACTLY LOCATE AND PROTECT ANY AND ALL UNDERGROUND UTILITIES.

REV NO.	DATE:	BY	REVISION

ALABAMA STATE DOCKS
MOBILE, ALABAMA

MCDUFFIE COAL TERMINAL
POND WATER RECYCLING PROJECT
ELECTRICAL SITE PLANS

PROJECT # 10360

DWG BY:	DATE:	REVISIONS						SCALE:
RAS	5/30/2017	BY:	DATE:	BY:	DATE:	BY:	DATE:	AS INDICATED
CHKD. BY:	DATE:							DRAWING NO.:
TA	5/30/2017							E1

PANEL "P1" CIRCUIT SCHEDULE

125 AMP MAIN BREAKER
277/480V, 3ø, 4W, 65K AIC

NEMA 3R
COPPER BUS
SURFACE MOUNTED

EQUIPMENT SERVED	CKT BREAKER			KVA/PHASE			CKT. No.	CKT. No.	KVA/PHASE			CKT BREAKER			EQUIPMENT SERVED
	WIRE	TRIP	POLE	A	B	C			A	B	C	POLE	TRIP	WIRE	
PUMP CONTROL PANEL 30 HP PUMP	#6	80	3	11.10			1	2	0.00			3	80	–	SPARE
					11.10		3	4		0.00					
						11.10	5	6			0.00				
SPARE	–	20	1	0.00			7	8	3.00			3	25	#10	TRANSFORMER (PNL "P2")
SPARE	–	20	1		0.00		9	10		3.00					
SPACE ONLY						0.00	11	12			3.00				
SPACE ONLY				0.00			13	14	0.00						SPACE ONLY
SPACE ONLY					0.00		15	16		0.00					SPACE ONLY
SPACE ONLY						0.00	17	18			0.00				SPACE ONLY
SPACE ONLY				0.00			19	20	0.00						SPACE ONLY
							A	B	C						
TOTAL CONNECTED KVA							14.10	14.10	14.10						

NOTE :
PROVIDE SEPARATE GROUNDING CONDUCTOR ON ALL CIRCUITS, SIZED PER NEC REQUIREMENTS.

PANEL "P2" CIRCUIT SCHEDULE

60 AMP MAIN BREAKER
120/240V, 3ø, 4W, 22K A.I.C. MINIMUM

NEMA 3R
COPPER BUS
SURFACE MOUNTED

EQUIPMENT SERVED	CKT BREAKER			KVA/PHASE			CKT. No.	CKT. No.	KVA/PHASE			CKT BREAKER			EQUIPMENT SERVED
	WIRE	TRIP	POLE	A	B	C			A	B	C	POLE	TRIP	WIRE	
AREA LIGHTS	#12	20	1	0.30			1	2	0.00			1	20		SPACE ONLY
RECEPTACLE (GFIC)	#12	20	1		0.18		3	4		0.00		1	20		SPACE ONLY
SPARE		20	1			0.00	5	6			0.00	1	20		SPACE ONLY
SPARE		20	1	0.00			7	8	0.00			1	20		SPACE ONLY
SPARE		20	1		0.00		9	10		0.00		1	20		SPACE ONLY
SPARE		20	1			0.00	11	12			0.00	1	20		SPACE ONLY
							A	B	C						
TOTAL CONNECTED KVOLT AMPS							0.30	0.18	0.00						

NOTE :
PROVIDE SEPARATE GROUNDING CONDUCTOR ON ALL CIRCUITS, SIZED PER NEC REQUIREMENTS.

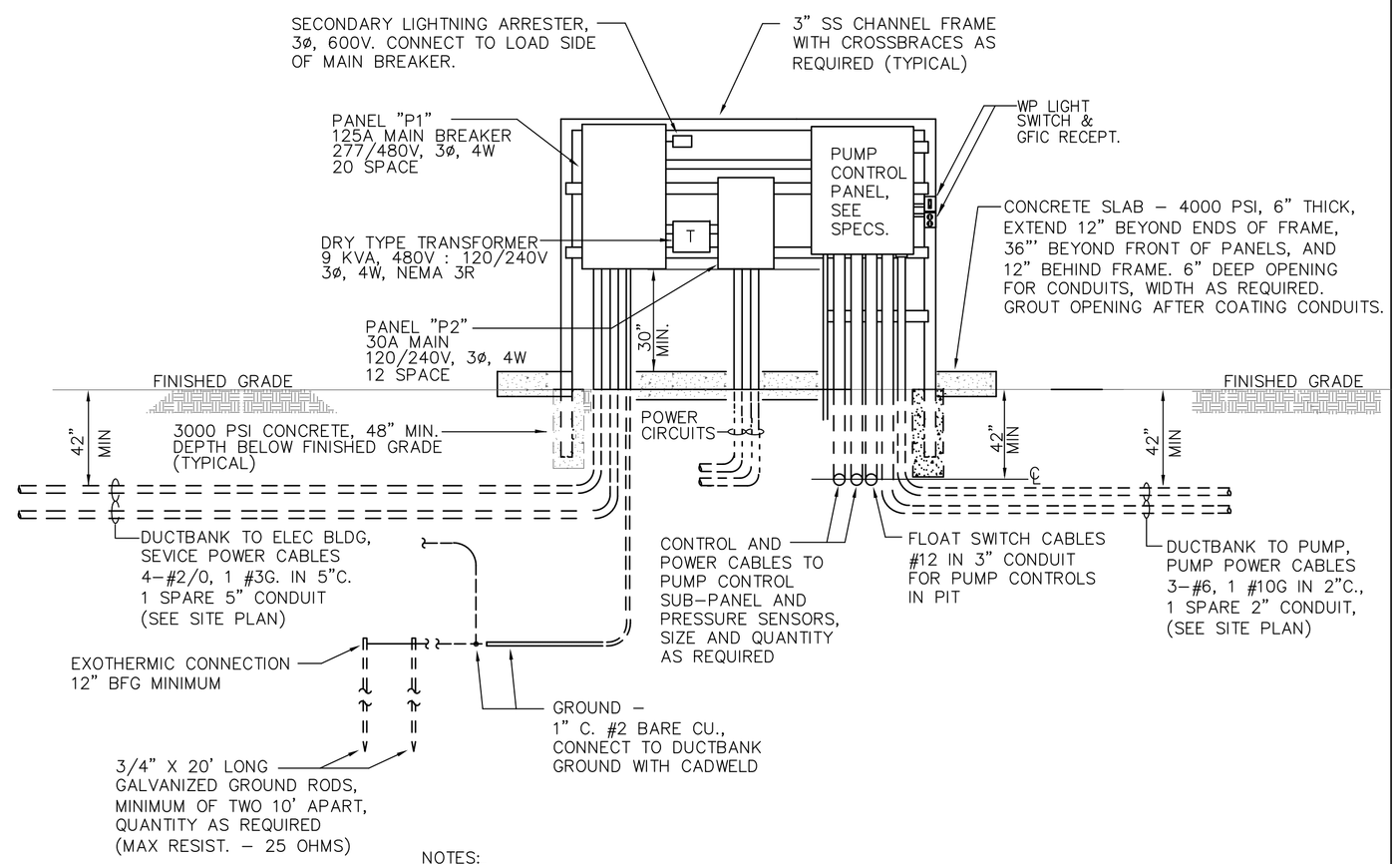

NOTES:

1. PUMP CONTROL SUB–PANEL SHALL BE MOUNTED AND GROUNDED SIMILARLY.
2. PROVIDE 6" WIDE OPENING IN CONCRETE PAD FOR ELECTRICAL CONDUITS.
3. GROUT AROUND CONDUITS AS REQUIRED WITH NON–SHRINK GROUT, COAT GALVANIZED STEEL CONDUIS AND STUBUPS WITH PROTECTIVE COATING WHERE IT WILL CONTACT CONCRETE.
4. SEE LOCATION OF PUMP CONTROL PANELS ON SITE PLANS FOR ORIENTATION.
5. PROVIDE/INSTALL 3" UG CONDUIT ENCASED IN CONCRETE FOR LIQUID LEVEL CONTROL CABLES, i.e. FLOAT SWITCHES. INCLUDE NEMA 4X JUNCTION BOX WITH WATERTIGHT ARMORED FLEX.

PUMP CONTROL PANEL AND FRAME DETAIL

NOT TO SCALE

GENERAL NOTES:

1. THE CONTRACTOR SHALL VISIT JOB SITE AND BECOME THOROUGHLY FAMILIAR WITH EXTENT OF WORK REQUIRED TO COMPLETE JOB PRIOR TO BID AND INCLUDE ALL COSTS TO BE FULLY OPERATIONAL.
2. ALL WORK AND WIRING SHALL COMPLY WITH OR EXCEED ALL NATIONAL ELECTRICAL CODE REQUIREMENTS AND ALL CODE REQUIREMENTS OF THE STATE, CITY AND LOCAL ELECTRIC CODES.
3. ALL EQUIPMENT SHALL BE GROUNDED AND BONDED IN ACCORDANCE WITH LOCAL REGULATIONS. OSHA REQUIREMENTS, AND THE NATIONAL ELECTRIC CODE.
4. ALL WORK THAT INVOLVES THE MECHANICAL EQUIPMENT AND THEIR LOCATIONS SHALL BE COORDINATED BETWEEN THE MECHANICAL AND ELECTRICAL CONTRACTORS BEFORE START OF CONSTRUCTION.
5. THE ELECTRICAL DRAWINGS ARE DIAGRAMMATIC AND DO NOT SHOW OFFSETS, BENDS, FITTINGS, JUNCTION BOXES, PULL BOXES, RISERS, ELEVATIONS, AND EXPANSION FITTINGS REQUIRED TO MEET FIELD CONDITIONS. THE CONTRACTOR SHALL DETERMINE ACTUAL FIELD CONDITIONS FOR REQUIRED MATERIAL AND HARDWARE REQUIREMENTS AND VERIFY ALL DIMENSIONS AND EXISTING EQUIPMENT AND STRUCTURAL MEMBER LOCATIONS
6. BY FIELD INSPECTION.
7. LOCATE ALL UNDERGROUND UTILITIES AND FIELD VERIFY ALL UTILITY LOCATIONS PRIOR TO START OF CONSTRUCTION. CONTRACTOR SHALL BE RESPONSIBLE FOR ALL DAMAGES TO AND REPAIR OF ANY UTILITIES AT NO ADDITIONAL COSTS. BEFORE ANY EXCAVATION, THE CONTRACTOR SHALL VERIFY THE LOCATIONS OF ANY POSSIBLE UNDERGROUND UTILITIES THAT ARE NOT PRESENTLY SHOWN ON THE CONTRACT DRAWINGS. THE UNDERGROUND UTILITIES THAT ARE SHOWN ON THE CONTRACT DRAWINGS ARE APPROXIMATE LOCATIONS ONLY. IT IS THE CONTRACTORS RESPONSIBILITY TO VERIFY THE EXACT LOCATIONS. CONTRACTOR SHALL STOP ALL WORK IF ANY UNDERGROUND UTILITIES ARE DISCOVERED DURING EXCAVATION THAT WERE NOT PREVIOUSLY IDENTIFIED UNTIL CLEARED BY ASPA.
8. PROVIDE/INSTALL GROUND WIRE SIZED PER NEC REQUIREMENTS IN ALL LIGHTING AND POWER CIRCUITS. RACEWAY IS NOT PERMITTED AS GROUND.
9. ALL WORK SHALL BE PRIOR COORDINATED BETWEEN THE PRIME AND SUB CONTRACTORS OF ALL TRADES TO ENSURE THAT RESPONSIBILITIES FOR ALL COMPONENTS AND WORK REQUIRED IS ASSIGNED.
10. OTHER TRADES' UNDERGROUND PIPING TAKES PRECEDENT OVER THE UNDERGROUND ELECTRICAL CONDUITS. COORDINATE WITH OTHER TRADES PRIOR TO START OF CONSTRUCTION IN ALL AREAS TO AVOID CONFLICTS.
11. DUCTBANKS SHALL BE TAMPED BEFOREHAND AND HAVE 6" STONE BASE INSTALLED UNDERNEATH.
12. MOTOR FRAME, METAL HANDRAILS, CONTROL PANEL SUPPORT FRAMES, REBAR, ETC. SHALL BE GROUNDED BY CONNECTION TO 10' x 3/4" GROUND ROD(S) BY A GREEN EQUIPMENT GROUNDING CONDUCTOR SIZED PER NEC REQUIREMENTS. INDICATE COMPLIANCE IN SUBMITTALS. ADDITIONAL GROUND RODS SHALL BE ADDED AS REQUIRED TO ACHIEVE MAX RESISTANCE TO GROUND OF 10 OHMS.
13. CONTRACTOR SHALL CONNECT THE GROUND WIRES FROM THE DUCTBANK TO THE GROUND RODS. EXOTHERMIC WELDS REQUIRED.
14. DUCTBANK SHALL HAVE RED DYE PRE–MIXED WITH 5000 PSI CONCRETE. TEST CYLINDERS & REPORTS REQD.
15. SEE MECHANICAL AND CIVIL DWGS FOR EXACT LOCATION OF EQUIPMENT, INFORMATION, AND REQUIREMENTS.
16. SEE SPECIFICATIONS FOR ADDITIONAL INFORMATION AND REQUIREMENTS.
17. THE CONTRACTOR SHALL INSTALL A NYLON OR GALVANIZED PULL WIRE WITH 200# MIN TENSILE STRENGTH IN EACH EMPTY CONDUIT.
18. CONTRACTOR SHALL PROVIDE A TWO YEAR WRITTEN WARRANTY AFTER FINAL ACCEPTANCE FOR EQUIPMENT AND DEFECTIVE WORKMANSHIP ON ALL WORK PERFORMED UNDER THIS CONTRACT UNLESS INDICATED OTHERWISE IN THE SPECIFICATIONS.
19. ALL DISCONNECT SWITCHES SHALL BE FUSIBLE TYPE AND NEMA 3R. FUSES SIZED AS REQUIRED.
20. INSTALL BLACK BAKELITE NAME PLATES WITH 1" WHITE LETTERING TO ALL PANELS AND DISCONNECTS. SECURE WITH SCREWS, SEAL WITH INDUSTRIAL CAULK, AND PROVIDE TYPED PANEL SCHEDULE.
21. RIGID GALVANIZED STEEL (RGS) CONDUIT SHALL BE USED ABOVE GRADE, WHERE EXPOSED TO DAMAGE, AND WHERE NOTED EXCEPT WHERE ROUTED IN DUCTBANK OR CABLE TRAY. AT ALL LOCATIONS WHERE CONDUIT IS ABOVE AND BELOW GRADE, CONDUIT SHALL BE RIGID STEEL TO 12" ABOVE AND 42" MINIMUM BELOW GRADE.
22. CONTRACTOR SHALL PROVIDE AND INSTALL COMPLETE FINAL CONTROL AND POWER WIRING OF ALL EQUIPMENT REQUIRED FOR A FULLY FUNCTIONAL SYSTEM. EQUIPMENT SUBSTITUTION MAY REQUIRE ADDITIONAL WORK NOT INDICATED OR SPECIFIED WHICH SHALL BE PROVIDED AND INSTALLED AT NO ADDITIONAL COST TO OWNER.
23. ALL PERSONNEL SHALL HAVE TWIC AND ASPA ID. SEE ACCESS POLICY AT ASDD.COM. INCLUDE ALL ASSOCIATED COSTS INCLUDING ESCORTS IF REQUIRED IN BID.
24. CONTRACTOR SHALL PROVIDE PUMP CONTROL PANEL, PUMP CONTROL SUB–PANEL, REMOTE CONTROL PANEL, LEVEL SWITCHES WITH CABLES, PRESSURE SENSORS, ETC AS INDICATED.
25. 38. COORDINATE WITH OTHER TRADES PRIOR TO BID AND START OF CONSTRUCTION TO ASSURE THAT ALL COSTS AND WORK ARE INCLUDED AND ASSIGNED TO SUBCONTRACTORS FOR A FULLY FUNCTIONAL TURNKEY INSTALLATION.
26. CONTRACTOR SHALL PROVIDE A TWO YEAR WRITTEN WARRANTY AFTER FINAL ACCEPTANCE FOR EQUIPMENT AND DEFECTIVE WORKMANSHIP ON ALL WORK AND EQUIPMENT PROVIDED AND INSTALLED UNDER THIS CONTRACT.
27. EXERCISE CAUTION WHILE ON THE MCDUFFIE COAL TERMINAL DUE TO CARGO OPERATIONS.

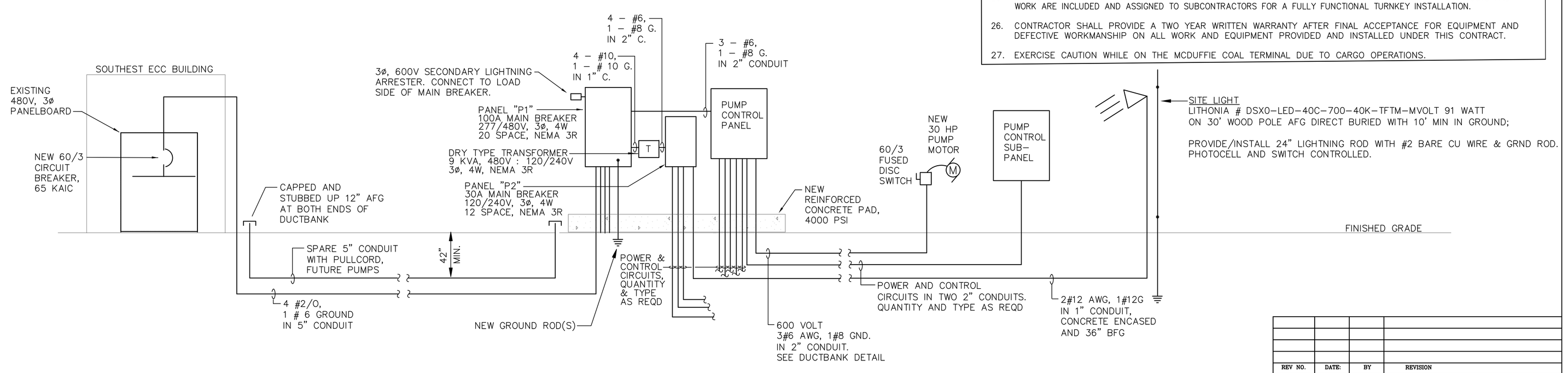

NOTE:
CONTRACTOR SHALL BE RESPONSIBLE FOR VERIFYING, INSTALLING, AND PROVIDING ALL CONDUITS AND POWER AND CONTROL WIRING REQUIRED.

ONE LINE POWER DIAGRAM

NOT TO SCALE

WHEN THIS DRAWING IS REPRODUCED AT ORIGINAL SCALE THIS BAR = 1 INCH

1 INCH

REV NO.	DATE:	BY	REVISION

ALABAMA STATE DOCKS
MOBILE, ALABAMA

MCDUFFIE COAL TERMINAL
POND WATER RECYCLING PROJECT
ELECTRICAL RISER, SCHEDULE, & DETAILS

PROJECT # 10360

DWG BY:	DATE:	REVISIONS						SCALE:
RAS	5/30/2017	BY:	DATE:	BY:	DATE:	BY:	DATE:	AS INDICATED
CHKD. BY:	DATE:							DRAWING NO.:
TA	5/30/2017							E2

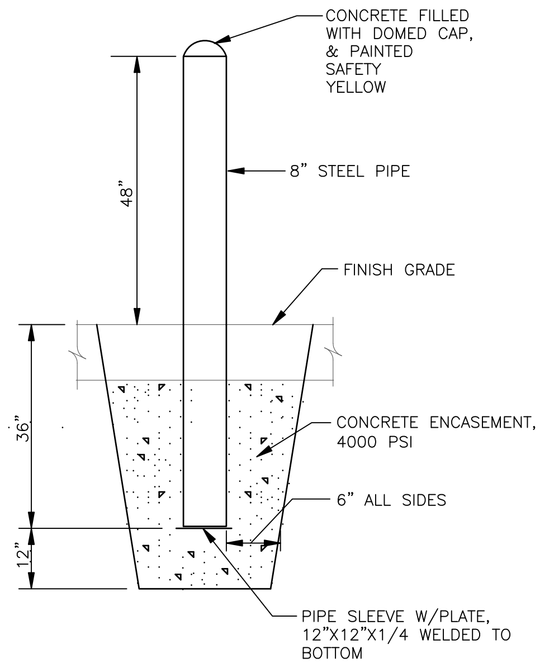

BOLLARD DETAIL .
NOT SCALE

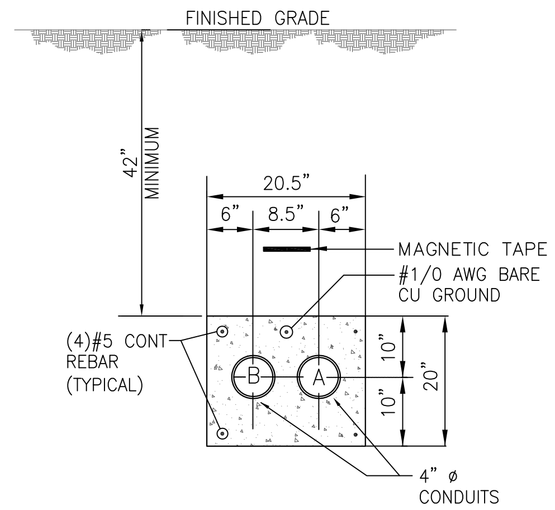

3 E1 E3 **SECTION**
NOT TO SCALE

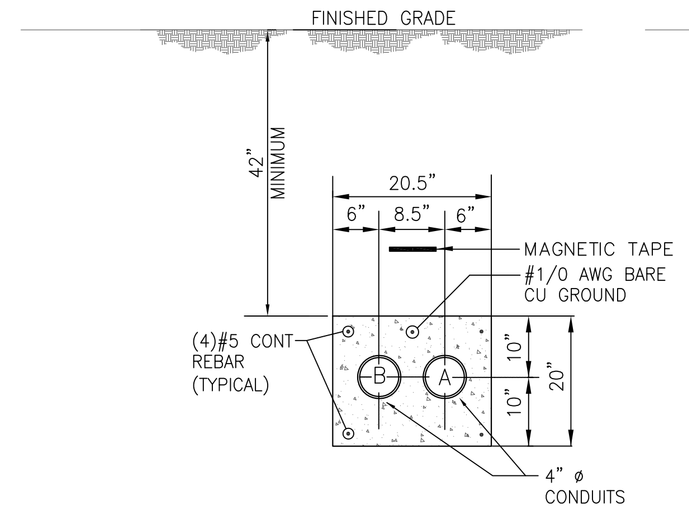

2 E1 E3 **SECTION**
NOT TO SCALE

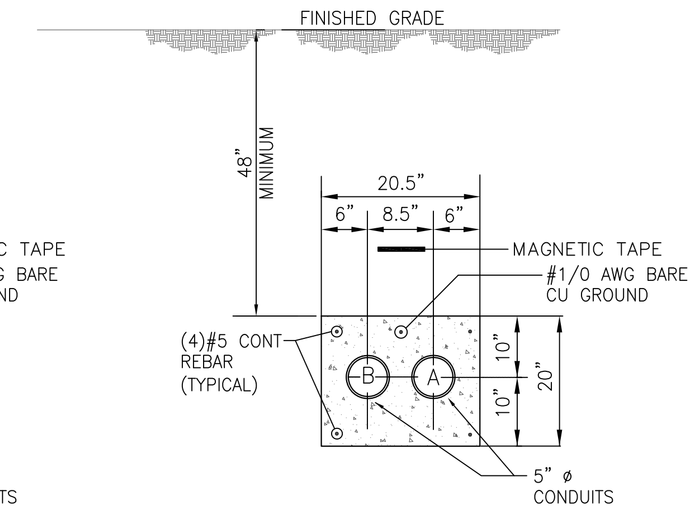

1 E1 E3 **SECTION**
NOT TO SCALE

DUCTBANK NOTES:

1. EMPTY MAIN DUCTBANK WITH PULLBOXES AND PULLCORDS FROM ELECTRICAL BUILDING TO PULLBOX NEAR MAIN PUMP CONTROL PANEL AND PANEL "P1" INSTALLED BY OTHERS.
2. FINAL COMPLETE EXTENSION OF RGS CONDUIT RACEWAY(S) TO EQUIPMENT IN ELECTRICAL BUILDING AND TO NEW POWER PANEL SHALL BE PROVIDED AND INSTALLED UNDER THIS CONTRACT.
3. THESE DUCTBANK DETAILS PROVIDED FOR INFORMATION PURPOSES.
4. PLACE SPACERS AT 5'-0" O.C. OR LESS FULL LENGTH OF DUCTBANK.
5. SPACERS SHALL BE ANCHORED TO HOLD IN PLACE WHILE CONCRETE BACKFILLING.
6. ELECTRICAL DUCT BANK CONCRETE SHALL 5000 PSI AND BE DYED RED.
7. ALL PVC CONDUIT SHALL BE SCHEDULE 40 TYPE EB UL APPROVED.
8. ASPA PM SHALL WITNESS CONCRETE POURS WITH ADVANCE PRIOR NOTICE.
9. DUCTBANK GROUND CONDUCTOR SHALL BE EXOTHERMICALLY BONDED AT PULLBOXES, GROUND RODS, TO EXISTING ELECTRICAL BUILDING GROUND SYSTEM, AND AS REQD BY NEC.
6. TAMP UNDER DUCTBANK AND INSTALL #57 STONE BASE 12' THICK.
7. CONDUITS SHALL BE SLOPED TO PULLBOXES FOR DRAINAGE.

NOTES:
1. JUNCTION BOX AND FLOAT SWITCHES MAY BE MOUNTED ON EAST OR WEST SIDE OF PIT.
2. INSTALL FLOAT SWITCH LEVELS INDICATED ON MECHANICAL DRAWINGS.

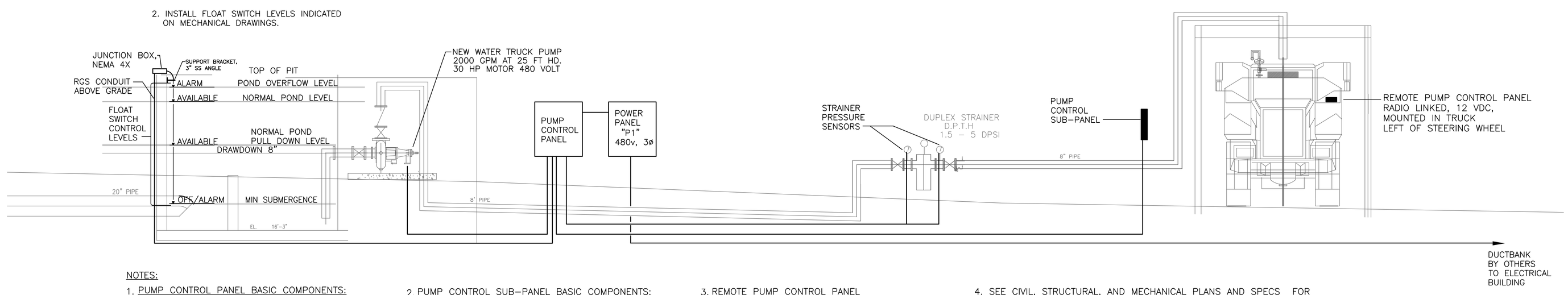

NOTES:

1. PUMP CONTROL PANEL BASIC COMPONENTS:
   SELECTOR - PUMP START/STOP,
   INDICATOR - PUMP RUN MODE,
   INDICATOR - PUMP LOW LEVEL SHUTOFF,
   INDICATOR - STRAINER HIGH PRESSURE SHUT OFF,
   INDICATOR - PUMP LOW LEVEL,
   SWITCH - AREA LIGHTS ON-OFF,
   SEE SPECIFICATIONS
2. PUMP CONTROL SUB-PANEL BASIC COMPONENTS:
   SELECTOR - PUMP START/STOP,
   INDICATOR - PUMP RUN MODE,
   INDICATOR - PUMP LOW LEVEL SHUTOFF,
   INDICATOR - STRAINER HIGH PRESSURE SHUT OFF,
   INDICATOR - PUMP LOW LEVEL,
   SWITCH - AREA LIGHTS ON-OFF
   SEE SPECIFICATIONS
3. REMOTE PUMP CONTROL PANEL RADIO LINKED, 12 VDC, AND MOUNTED IN TRUCK LEFT OF STEERING WHEEL
   SELECTOR - PUMP START / STOP,
   INDICATOR - PUMP RUN MODE,
   INDICATOR - PUMP LOW LEVEL,
   INDICATOR - PUMP LOW LEVEL SHUTOFF,
   INDICATOR - STRAINER HIGH PRESS SHUTOFF,
   SWITCH - AREA LIGHTS ON-OFF
   SEE SPECIFICATIONS
4. SEE CIVIL, STRUCTURAL, AND MECHANICAL PLANS AND SPECS FOR ADDITIONAL INFORMATION AND REQUIREMENTS.
5. CONTRACTOR SHALL PROVIDE AND INSTALL ALL COMPONENTS AND APPURTENANCES REQUIRED TO BE FULLY FUNCTIONAL INCLUDING CONTROLS FUNCTIONS AS INDICATED AND INCLUDE ALL COSTS IN BID WHETHER INDICATED OR NOT.
6. EMPTY DUCTBANK WITH PULLBOXES AND PULLCORDS INSTALLED BY OTHERS.
7. REQUESTS FOR INFORMATION (RFIS) SHALL BE SUBMITTED DURING THE PREBID PROCESS FOR CLARIFICATIONS TO ASSURE THAT ALL SYSTEMS ARE COMPLETELY FUNCTIONAL AND INCLUDED IN THE BID PRICE.

CONTROL SCHEMATIC DIAGRAM_
SCALE: NONE

WHEN THIS DRAWING IS REPRODUCED AT ORIGINAL SCALE THIS BAR = 1 INCH

1 INCH

EXISTING UNDERGROUND UTILITIES ARE SHOWN AT APPROXIMATE LOCATIONS. ACTUAL LOCATIONS MAY VARY SIGNIFICANTLY. CONTRACTOR SHALL DETERMINE THE EXACT LOCATION OF ALL EXISTING UTILITIES BEFORE COMMENCING WORK. CONTRACTOR AGREES TO BE FULLY RESPONSIBLE FOR ANY AND ALL DAMAGES THAT RESULT FROM HIS FAILURE TO EXACTLY LOCATE AND PROTECT ANY AND ALL UNDERGROUND UTILITIES.

REV NO.	DATE:	BY	REVISION

PORT OF MOBILE

ALABAMA STATE DOCKS
MOBILE, ALABAMA

MCDUFFIE WATER TRUCK STATION
ELECTRICAL DETAILS

DWG BY:	DATE:	REVISIONS						SCALE:
RAS	5/30/2017	BY:	DATE:	BY:	DATE:	BY:	DATE:	AS INDICATED
CHKD. BY:	DATE:							DRAWING NO.:
TA	5/30/2017							E-3